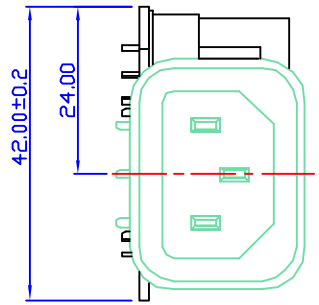

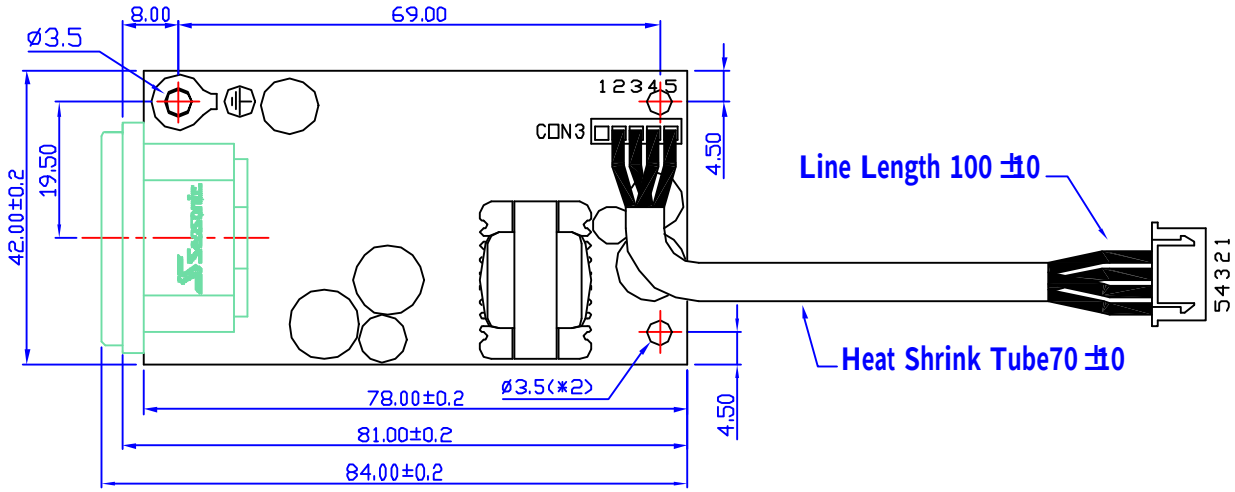

建議開孔尺寸31.0mmX22.9mm

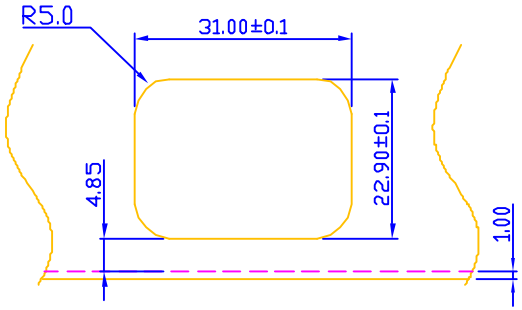

PANEL CUT-OUT

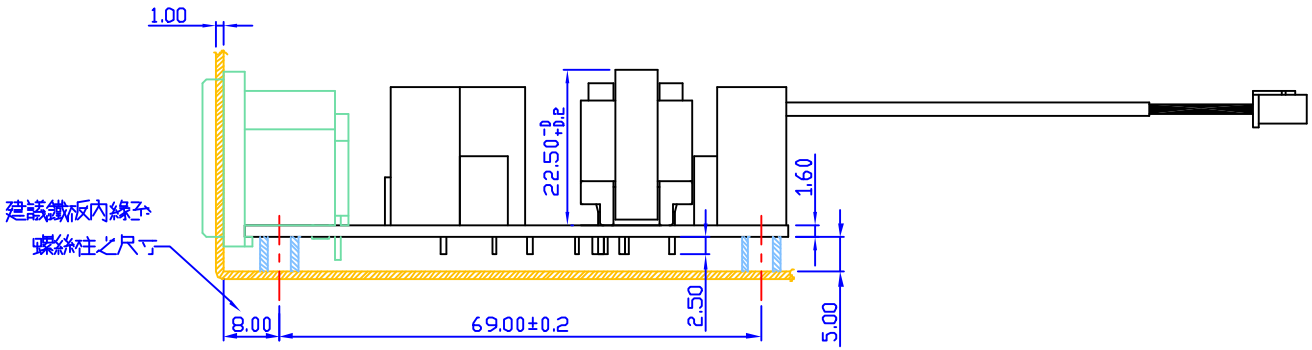

DESIGN CHANGE		
ITEM	REASON OF CHANGE	DESCRIPTION

COMMON TOLERANCE TABLE				
RANGE	<A>	<B>	<C>	<D>
< 8	±0.05	±0.1	±0.2	±0.4
8~25	±0.08	±0.15	±0.3	±0.5
25~80	±0.12	±0.25	±0.5	±1.0
80~250	±0.25	±0.4	±0.8	±1.5
250~800	±0.5	±0.8	±1.5	±3.0
800~2500	±1.0	±1.5	±3.0	±6.0
ANGULAR	±0.15°	±0.3°	±0.5°	±0.8°

SEA SONIC ELECTRONICS Co., Ltd.

FILE NO	010(Seasonic)機構圖	REV. NO	A0	DRAW BY	Tony
PART NO		SCALE	1:1	APPROVE BY	
PART NAME	PCB 78X42	UNITS	M/M	DATE	05/07/2002
MODEL NO	SSF-010(cable)	MATERIAL		PROJECTION	
PATH	D:\Tony\Acad\OFAN\SSF010(SC-8R)\Seasonic-socket				

Doc. No:RP-04-02-14 Rev. No:1.1